USER MANUAL

Thermoelectric Refrigerator

Model No: SB12-BM

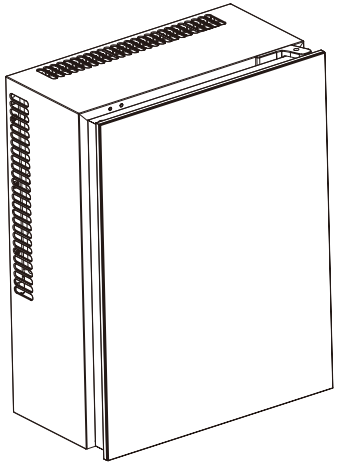

- Indication of parts.....2-3
- Instrution for use.....4
- Installation instructions.....5
- Change the swing hinge 6
- Trouble shooting guides.....6
- Electric diagram 7
- Energy saving tips 7
- Specification tables 8

Thank you very much for buying this product. Before using your new refrigerator, please read this user manual to ensure that you gain the maximum benefit from it.

WARNING:

1.This appliance is not intended for use by persons (including children) with reduced physical, sensory or mental capabilities, or lack of experience and knowledge, unless they have been given supervision or instruction concerning use of the appliance by a person responsible for their safety.

2. Children should be supervised to ensure that they do not play with the appliance.

3. This appliance can be used by children aged from 8 years and above and persons with reduced physical, sensory or mental capabilities or lack of experience and knowledge if they have been given supervision or instruction concerning use of the appliance in a safe way and understand the hazards involved. Children shall not play with the appliance. Cleaning and user maintenance shall not be made by children without supervision.

4. If the supply cord is damaged, it must be replaced by the manufacturer, its service agent or similarly qualified persons in order to avoid a hazard.

5. To avoid a hazard due to instability of the appliance, it must be fixed in accordance with the instructions.

6. When positioning the appliance, ensure the supply cord is not trapped or damaged.

7. Do not locate multiple portable socket-outlets or portable power supplies at the rear of the appliance.

8. Keep ventilation openings, in the appliance enclosure or in the built-in structure, clear of obstruction.

9. Do not use mechanical devices or other means to accelerate the defrosting process, other than those recommended by the manufacturer.

10. Do not damage the refrigerant circuit.

11. Do not use electrical appliances inside the drink storage compartments of the appliance, unless they are of the type recommended by the manufacturer.

12. Do not store explosive substances such as aerosol cans with a flammable propellant in this appliance.

13. Children aged from 3 to 8 years are allowed to load and unload refrigerating appliances.

14. This appliance is intended to be used in household and similar applications such as

– staff kitchen areas in shops, offices and other working environments;

– farm houses and by clients in hotels, motels and other residential type environments;

– bed and breakfast type environments;

– catering and similar non-retail applications.

15. To avoid contamination of drink, please respect the following instructions:

– Opening the door for long periods can cause a significant increase of the temperature in the compartments of the appliance.

– Clean regularly surfaces that can come in contact with drink and accessible drainage systems.

– Clean water tanks if they have not been used for 48 h, flush the water system connected to a water supply if water has not been drawn for 5 days.

– If the refrigerating appliance is left empty for long periods, switch off, defrost, clean, dry, and leave the door open to prevent mould developing within the appliance.

Note: This appliance contains flammable refrigerant R600a and foaming agent cyclopentane. Please avoid contact fire when you transport and use it.
Please ask professional for servicing when the machine broke down.
Please send it to your local appointed disposal station when you discard it.

1.Stick the paper with six holes on the wall, pay attention to the direction of the paper.
2.According to the location of the holes, drill it. The diameter is 6 mm, and the depth no less than 26 mm.
3.Take off the paper from the wall after drilling the holes.

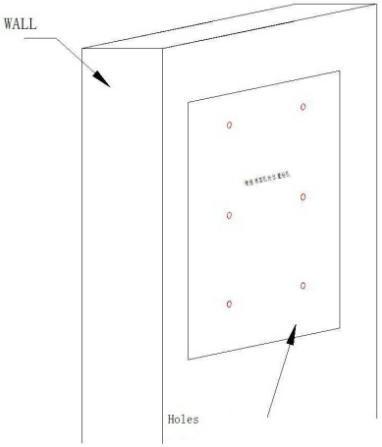

4.Put the plastic plug into the hole totally.
5.Put the bracket on the wall, the three holes of the bracket must aim the place, correspond to the holes of the wall. The convexity of the bracket need to be the side up.
6.Install the screws into the holes and fix the bracket.
7.Intall the minibar from top to bottom on the bracket.

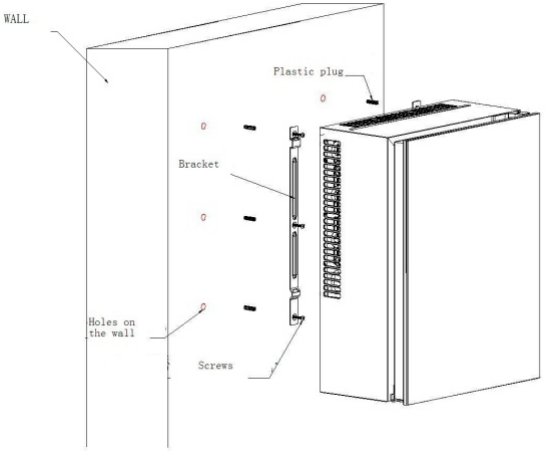

• Indication of Parts

SB12-BM

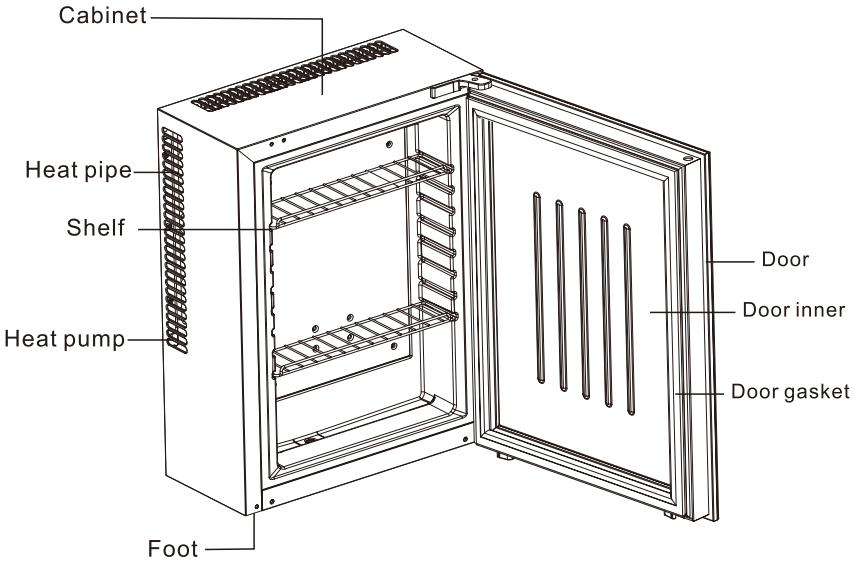

• **Specification Table**

Model No.	SB12-BM
Net Volume(liters)	12
Voltage (V)	220-240
Frequency (Hz)	50
Rated Power (W)	65
Dimension (mm)	402x225x522
Packing (mm)	468x298x610
Net Weight (kg)	11.6
Gross Weight (kg)	13.0
Approval	CB/CE

Correct disposal of this product	
	This symbol on the product, or in its packaging, indicates that this product may not be treated as household waste. Instead, it should be taken to the appropriate waste collection point for the recycling of electrical and electronic equipment. By ensuring this product is disposed of correctly, you will help prevent potential negative consequences for the environment and human health, which could otherwise be caused by the inappropriate waste handling of this product. For more detailed information about the recycling of this product, please contact your local council, your household waste disposal service, or the shop where you purchased the product.

• Electric Diagram

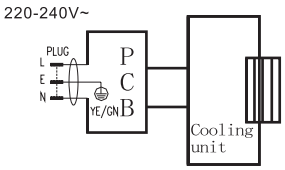

• Energy Saving Tips

• The refrigerator should be located in the coolest area of the room, away from heat producing appliances, and out of the direct sunlight.

• Overloading the refrigerator forces the thermoelectric cooling system to run longer.

• Reduce door openings and extended searches, remove as many item as needed at one time, and close the door as soon as possible.

• One characteristic of heat-pipe units is the length of time it requires to recover from having the door opened and shut frequently. It may be necessary to wait longer for the temperature to return to its former level once the door has been opened for too long. This is normal for the type of unit.
• Heat-pipe technology costs just pennies to operate. It is environmentally friendly due to the lack of CFC's.

• Temperature control

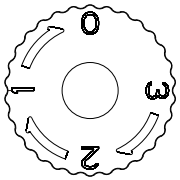

Setting the Temperature Control
Your refrigerator has only one control for regulating the temperature.The temperature control is located at the rear of the refrigerator.
To control the internal temperature,adjust the control knob according to the ambient temperature or purpose of use.
The range of the temperature control is from poisiton”3”to”1”.

• Instruction for useInstruction for use

§ Note

• Position your refrigerator so that the plug is accessible.
• Keep your refrigerator out of direct sunlight.
• Do not place next to heat generating appliance.
• Do not place directly on the ground. Provide suitable stand

§ Very important

• The refrigerator will have better performance at ambient of 20-25 degree; We suggest the refrigerator be powered off if the ambient temperature is lower than 10 degree.

• After plugging the appliance, allow the unit to cool down for 2-3 hours before placing beverage into the refrigerator compartment.

• Ventilation is very important for this kind thermoelectric refrigerator; The inside PCB will be broken easily if the ventilation is bad; It will also reduce the life of the refrigerator.

• The refrigerator applies automatic defrosting system, so there is no need to defrost it manually.

§ Power supply

• The refrigerator must be connected to a properly earthed socket in line with relevant valid country regulations before operating;

• Check the data label (which is on the side of the refrigerator) for voltage and frequency corresponds to your local one; If not, don't plug your cable into the socket;

§ Warning

• If the supply cord is damaged, it must be replaced by the manufacturer, its service agent or similarly qualified persons in order to avoid a hazard.
• This appliance is not intended for use by persons (including children) with reduced physical, sensory or mental capabilities, or lack of experience and knowledge, unless they have been given supervision or instruction concerning use of the appliance by a person responsible for their safety.
• Children should be supervised to ensure that they do not play with the appliance.
• **WARNING:** To avoid a hazard due to instability of the appliance, it must be fixed in accordance with the instruction.

• Installation instructions

When install a Heat pipe Refrigerator, ventilation should be considered seriously, please refer to the following:

- There should be left at least 200 cm³ for ventilation
- The distance between wall and refrigerator side should be at least 20mm
- The bottom should be left at least 50mm for air flowing air passing through must not be preheated
- Entire cooling system should be considered in the ventilation
- The following four pictures show four installation ways:

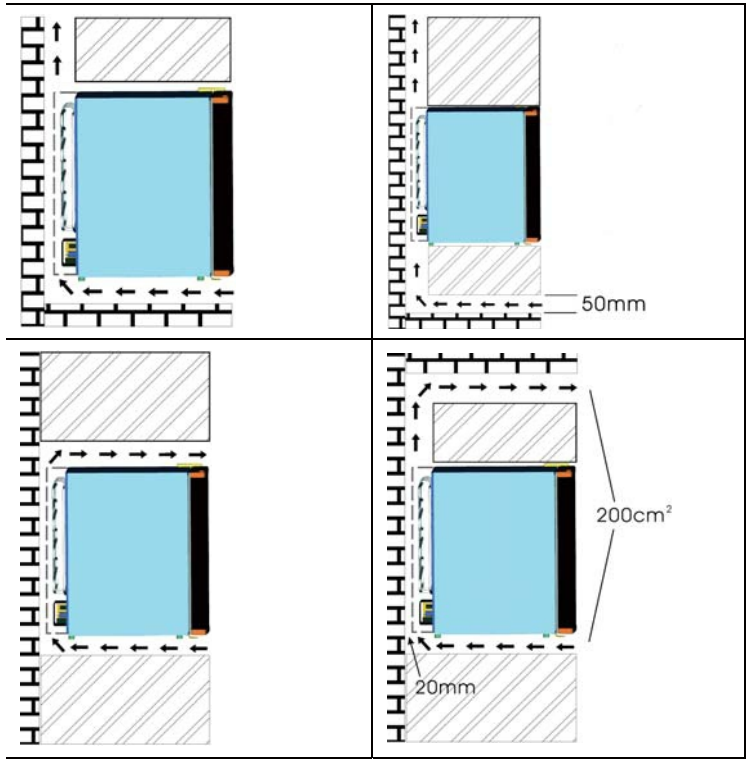

• Changing the Swing Hinge

This refrigerator has the capability of the door opening from either the left or right side. The unit is delivered to you with the door opening from the left side. Should you desire to reverse the opening direction, please follow the below instructions.

All the hinge can be used for left or right swing,except for model BCH-40 and BCH-42,please find an additional left upper hinge in the bag of the user manual for installation as below.

- Pull out the three screws from right hinge.
- Remove the hinge (upper and lower) away.
- Install the door in suitable position with hinges, use three self-screws to fix them.

· Trouble Shooting Guide

PROBLEM	POSSIBLE CAUSE
Refrigerator does not operate	Not plugged in. The circuit breaker tripped or a blown fuse.
Refrigerator does not operate.	The room temperature is hotter than normal. The door is opened too often. The door is not closed completely. The temperature control is not set correctly. The door gasket does not seal properly. The refrigerator does not have the correct clearances. Abnormal voltage.
The light does not work.	Not plugged in. The circuit breaker tripped or a blown fuse. The LED light has burned out.
Vibrations.	Check to assure that the refrigerator is level.
The door will not close properly.	The refrigerator is not level. The door was reversed and not properly installed. The gasket is dirty. The shelves, bins, or baskets are out of position.